PC-2700-C3

SUPER MINI FLEX-ATX DESK-TOP CASE EXPLOSIVE DRAWING

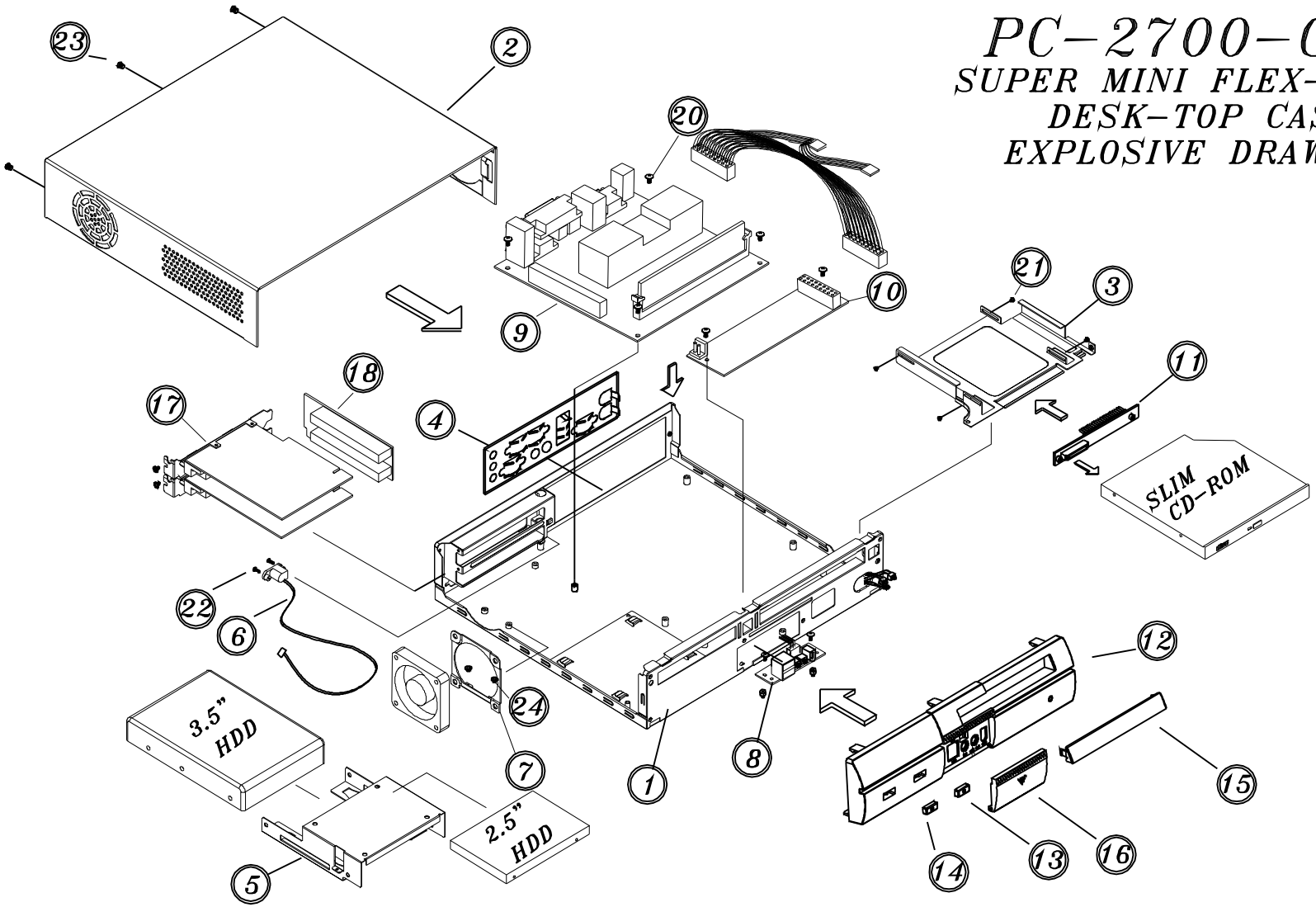

*DIMENSION:
295(L)X288(W)X63.4(H)(m/m)

1	BOTTOM CHASSIS	4	I/O SHIELDING	7	FAN BRACKET	10	DC POWER BOARD	13	POWER BUTTON	16	USB-COVER	19	SCREW T/M3*0.5	22	SCREW S3.5*12
2	TOP COVER	5	HDD-BRACKET	8	USB BOARD	11	SCD-CABLE	14	RESET BUTTON	17	PCI CARD	20	SCREW S/M3*0.5	23	SCREW B/6-32
3	SCD BRACKET	6	DC WIRE	9	MAIN BOARD	12	FRONT PANEL	15	SCD-COVER	18	RISER CARD	21	SCREW S2*3	24	SCREW T/4.7*10