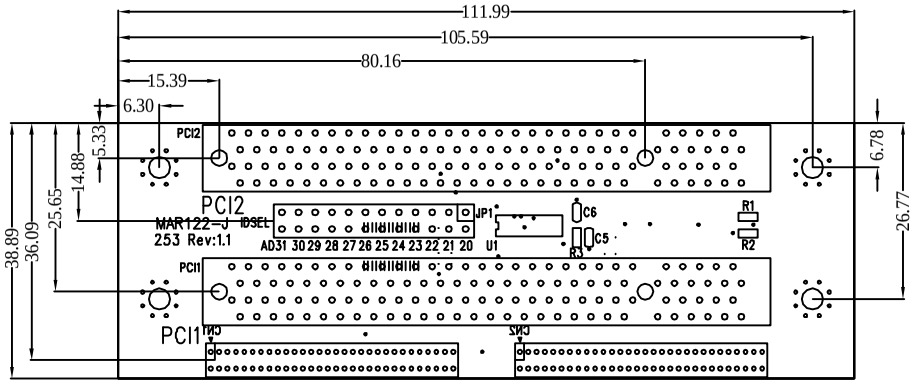

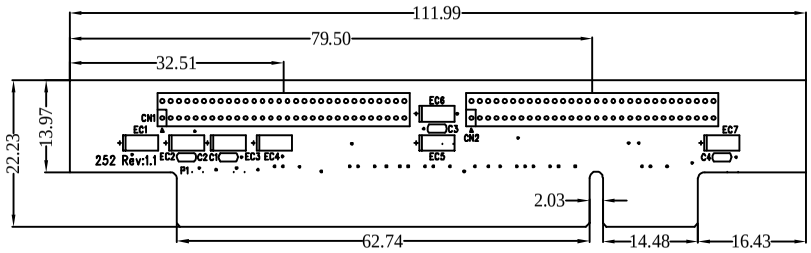
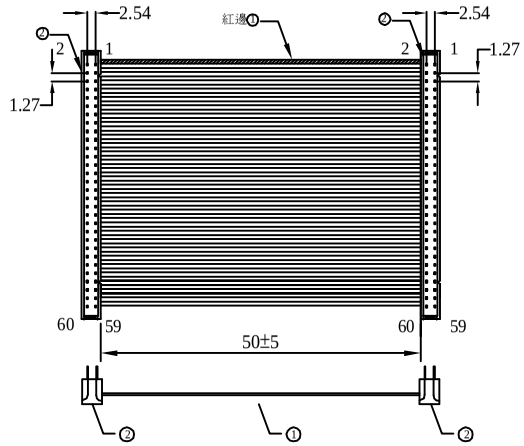
Cable:JMS098-50 FOR CN1,CN2